Cambridge Assessment International Education

Cambridge IGCSE™

CANDIDATE NAME	

CENTRE NUMBER						CANDIDATE NUMBER				

0615362628

DESIGN & TECHNOLOGY **0445/41**

Paper 4 Systems & Control **May/June 2024**

1 hour

You must answer on the question paper.

No additional materials are needed.

INSTRUCTIONS

- Section A: answer **all** questions.
- Section B: answer **one** question.
- Use a black or dark blue pen. You may use an HB pencil for any diagrams or graphs.
- Write your name, centre number and candidate number in the boxes at the top of the page.
- Answer in the space provided.
- Do **not** use an erasable pen or correction fluid.
- Do **not** write on any bar codes.
- You may use a calculator.

INFORMATION

- The total mark for this paper is 50.
- The number of marks for each question or part question is shown in brackets [ ].
- All dimensions are in millimetres unless otherwise stated.

This document has **20** pages.

DC (SL) 341065
© UCLES 2024

Section A

Answer **all** questions in this section.

1 Fig. 1.1 shows an aluminium stepladder and a softwood bench.

Fig. 1.1

(a) Name the type of structure used in both items.

..... [1]

(b) State the method that is used to make the structures rigid.

..... [1]

2 **(a)** Beams used in a building can be made from wood, steel, concrete or composite materials. Give **one different** benefit for each material.

Wood .....

.....

Steel .....

.....

Concrete .....

.....

Composite .....

.....

[4]

(b) Fig. 2.1 shows a wooden beam supported at one end in the wall of a building.

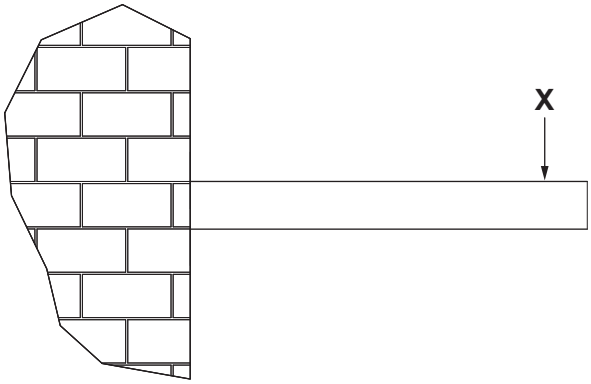

Fig. 2.1

Describe the effect on the beam when a load is applied at point **X**.

.....

.....

..... [2]

3 Fig. 3.1 shows a lever being used to move a link rod that is attached to a second lever.

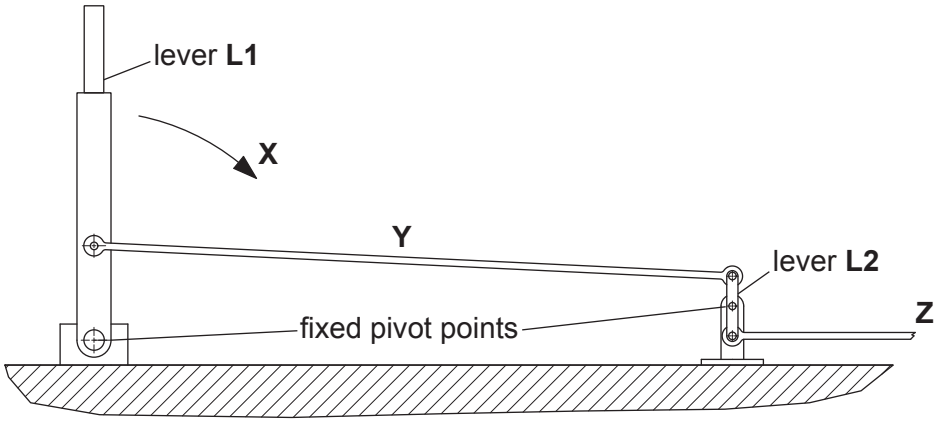

Fig. 3.1

(a) State the class of levers **L1** and **L2**.

L1 .....

L2 .....
[2]

(b) Add arrows to Fig. 3.1 to show how link rods **Y** and **Z** will move when **lever L1** rotates in direction **X**. [2]

4 Oil or grease can be used to reduce friction in a moving joint.
Give **two** benefits of reducing friction in a mechanism.

1 .....

2 .....
[2]

5 Give **two** reasons for using spur gears in a mechanism.

1 .....

.....

2 .....

.....
[2]

6 Fig. 6.1 shows three safety symbols that may be found in a workshop.

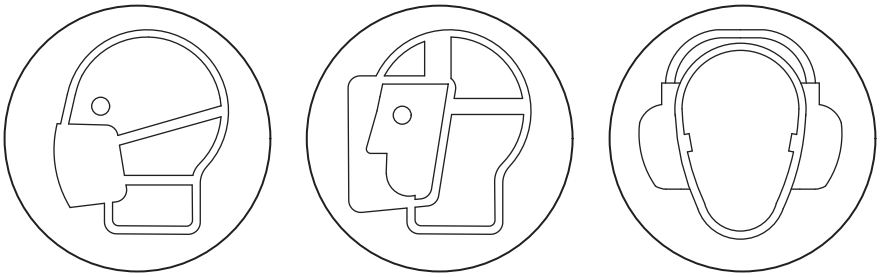

A **B** **C**

Fig. 6.1

State the meaning of each safety symbol.

A .....

B .....

C .....
[3]

7 Name **one** specific material that is used as an electrical insulator.

..... [1]

8 Complete Table 8.1 by circling the correct unit used to measure different electrical values. One has been completed for you.

Table 8.1

Electrical value	Unit				
power	mV	pF	MΩ	μA	kW
resistance	mV	pF	MΩ	μA	kW
capacitance	mV	pF	MΩ	μA	kW
current	mV	pF	MΩ	μA	kW
voltage	mV	pF	MΩ	μA	kW

[3]

9 **(a)** State how a reed switch is operated.

.....

..... [1]

(b) Give **one** benefit of using a reed switch.

.....

..... [1]

Section B

Answer **one** question from this section.

10 **(a)** Concrete is commonly used in structures.

(i) Name **three** materials that are used to make concrete.

1 .....

2 .....

3 .....
[3]

(ii) State the force that concrete will naturally have most resistance to.

..... [1]

(iii) Use sketches and notes to show how resistance to other forces can be increased when using concrete.

[2]

(iv) Fig. 10.1 shows a design for a concrete pillar that could be used to resist load in a structure.

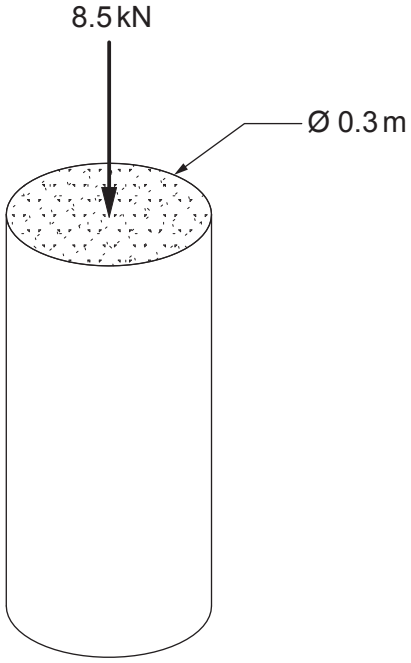

Fig. 10.1

Calculate the stress that the pillar is subject to when a compressive force of 8.5 kN is applied.

$$\text{Use the formula: stress} = \frac{\text{force (N)}}{\text{cross-sectional area (m}^2\text{)}}$$

.....

.....

.....

.....

..... [3]

(b) Fig. 10.2 shows a beam in a roof with loads applied to it. The beam is supported at each end by a wall.

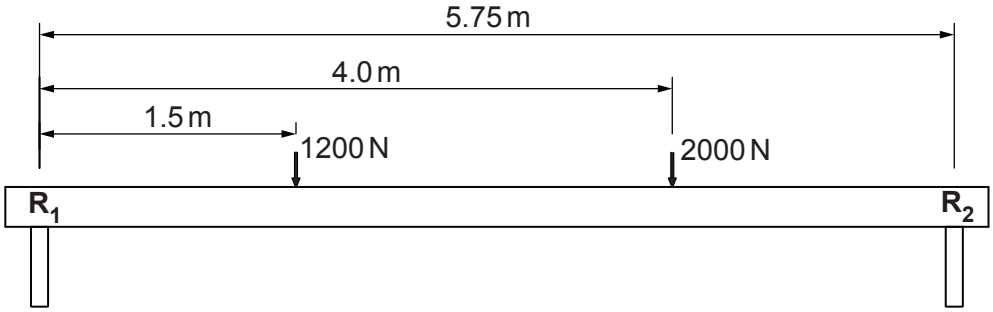

Fig. 10.2

(i) The beam is in equilibrium.
State what is meant by the term 'equilibrium'.

.....

..... [1]

(ii) Calculate the reactions at $\mathbf{R_1}$ and $\mathbf{R_2}$.

Reaction at $\mathbf{R_1}$ .....

.....

.....

Reaction at $\mathbf{R_2}$ .....

.....

.....
[4]

(iii) Give **two** examples of natural defects that could be present in a wooden beam.

1 .....

2 .....
[2]

(iv) Fig. 10.3 shows part of a roof truss.

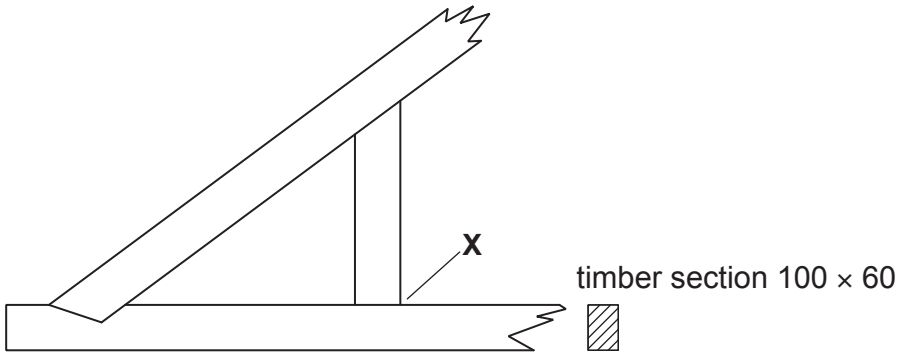

Fig. 10.3

Use sketches and notes to show a suitable method of joining the timber at **X**.
A method of preventing movement in the joint must be shown.

[3]

(c) Using an example of equipment used in building construction, explain **two** 'Factor of Safety' measures.

.....

.....

.....

..... [3]

(d) Fig. 10.4 shows three different methods of joining metals in a structure.
Give **one** different reason for using each method.

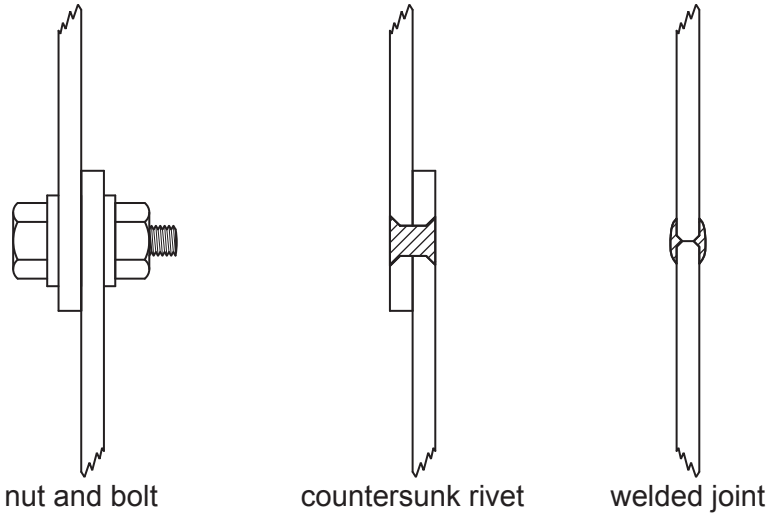

Fig. 10.4

Nut and bolt .....

Countersunk rivet .....

Welded joint .....
[3]

11 **(a)** Fig. 11.1 shows a piece of exercise equipment in a park.
The equipment uses feet and hands to operate it.

Fig. 11.1

(i) From the list below, give the name of the mechanism that is used to convert motion in the exercise equipment.

rack and pinion **crank and linkage** **ratchet and pawl**

..... [1]

(ii) State the conversion of motion that takes place when the equipment is used.

..... to ..... [2]

(iii) Fig. 11.2 shows where grease is applied to lubricate the moving parts on a different piece of exercise equipment.

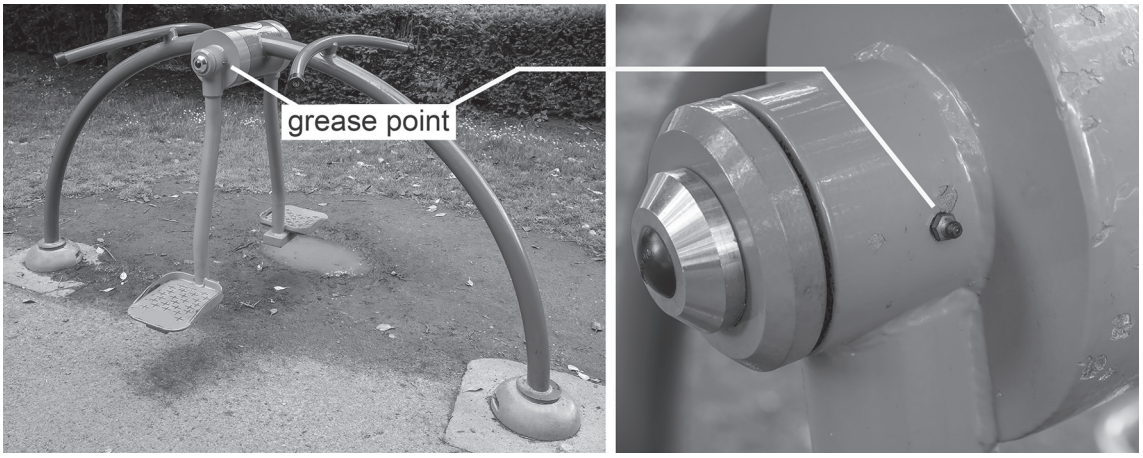

Fig. 11.2

Explain why grease is used rather than oil to lubricate the equipment.

.....

.....

.....

..... [2]

(b) Table 11.1 lists four different types of wheel.

Table 11.1

Type of wheel	**Bearing type**		
	plain	**roller**	**ball**
train			
skateboard			
wheelbarrow			
cycle			

(i) Tick (✓) the most suitable type of bearing for each wheel.

[4]

(ii) Describe the factors that must be considered when choosing bearings for a particular use.

.....

.....

.....

..... [3]

(c) Fig. 11.3 shows an eccentric mechanism and a cam and follower.

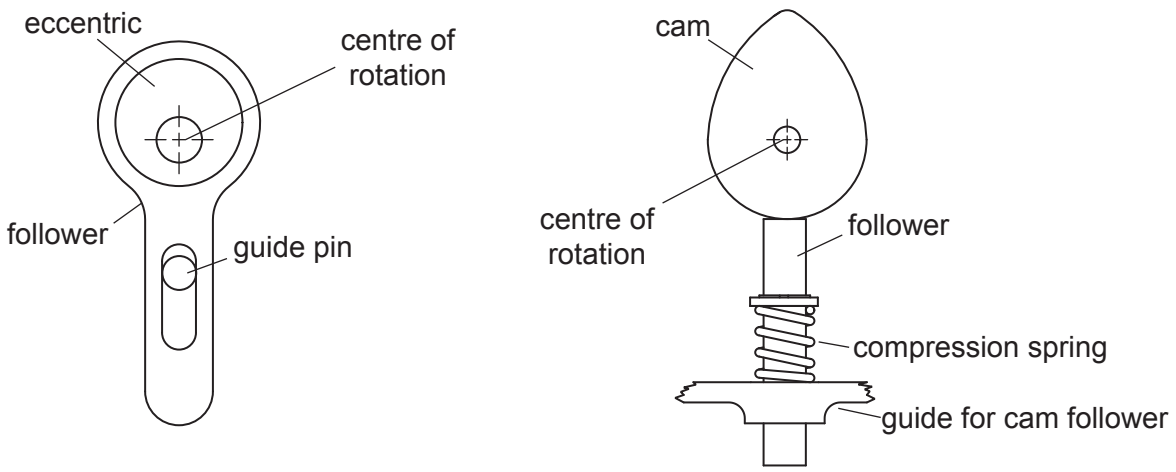

Fig. 11.3

(i) Describe the difference between the two mechanisms in terms of rise, fall and dwell.

.....

.....

..... [2]

(ii) Give **one** benefit of the eccentric mechanism shown in Fig. 11.3.

..... [1]

(iii) State **two** ways that efficiency can be lost in a mechanism.

1 .....

2 .....

[2]

(d) Fig. 11.4 shows a gear arrangement.

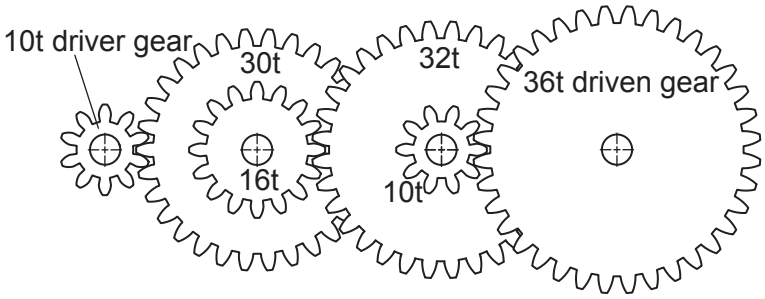

Fig. 11.4

Calculate the speed of the driven gear when the driver gear is rotating at 864 rpm.

.....

.....

.....

..... [3]

(e) Levers and links are commonly used in mechanisms.

(i) A bell crank lever is used to change the direction of force through 90°.
Use sketches and notes to show a bell crank lever connecting the two links shown.

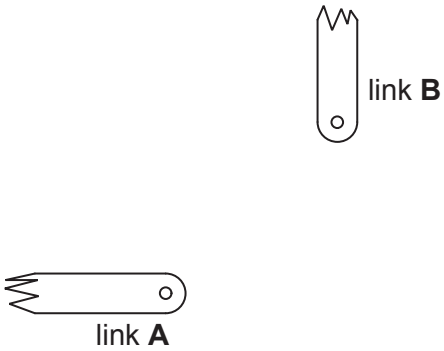

[2]

(ii) Fig. 11.5 shows a threaded bolt that could be used to connect two links together. State the meaning of the label M10 × 1.5.

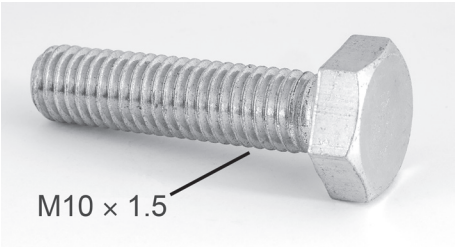

Fig. 11.5

M10 .....

1.5 .....
[2]

(iii) State the rotational force that is applied to the body of the bolt when a spanner is used to tighten it.

.....

..... [1]

12 **(a)** Fig. 12.1 shows a rectangular LED that will be used to show the logic level of a NAND gate output.

Fig. 12.1

(i) State **one** way of identifying the negative leg (cathode) of the LED.

.....

..... [1]

(ii) Fig. 12.2 shows a test circuit for the LED.

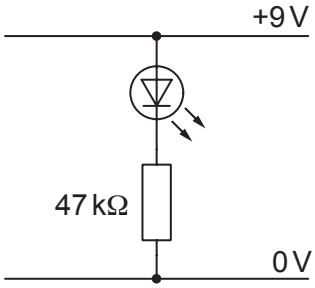

Fig. 12.2

Explain why the LED does **not** appear to light up when the circuit is tested.

.....

.....

..... [2]

(iii) The LED has a voltage drop of 1.75 V and the supply to the circuit is +9 V.

Calculate the value of resistor that will limit the current passing through the LED to 15 mA.

Use the formula: $I = \frac{V}{R}$

.....

.....

.....

..... [3]

(b) Fig. 12.3 shows the outline of a CMOS 4001 quad NOR gate IC, with the internal connections to the logic gates shown.

4001B

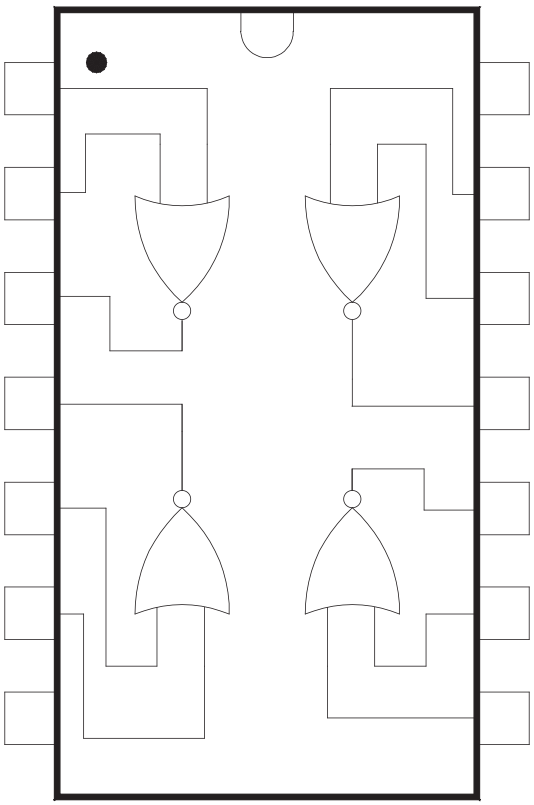

Fig. 12.3

(i) Add pin numbers to the IC outline in Fig. 12.3. [2]

(ii) Add the positive and 0 V connections to the IC outline in Fig. 12.3. [1]

(iii) State the logic function that will result from connecting the two inputs of one of the logic gates.

..... [1]

(iv) Fig. 12.4 shows a circuit diagram for a PTM switch that could be used to provide a logic signal to one of the inputs of the NOR gate IC.

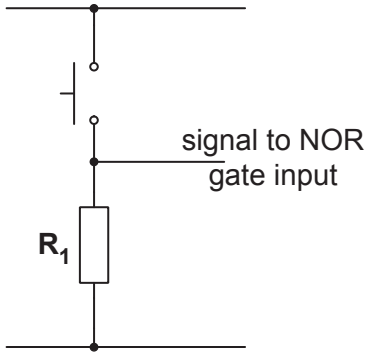

Fig. 12.4

Explain why Resistor $\mathbf{R_1}$ is necessary.

.....

.....

.....

..... [2]

(c) **(i)** State how the direction of rotation of a DC motor can be reversed.

.....

..... [1]

(ii) Fig. 12.5 shows a circuit diagram with a DPDT relay and a motor.
The relay is operated by a transistor switch.
Add connections to the relay contacts that will allow the motor to be reversed.

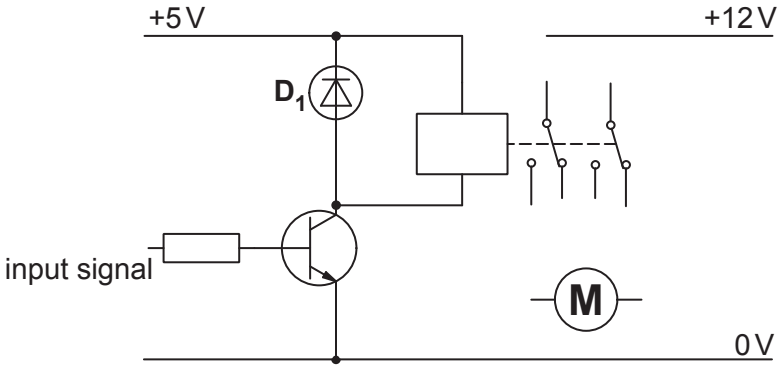

Fig. 12.5

[3]

(iii) Explain why diode $\mathbf{D_1}$ is included in the circuit.

.....

.....

..... [2]

(d) Fig. 12.6 shows part of a printed circuit layout.

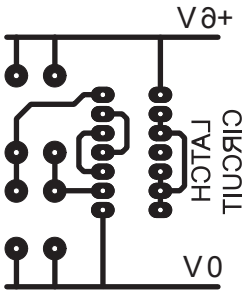

Fig. 12.6

(i) Explain why written information that is to be printed on the copper layer of the circuit board must appear in mirror writing when designing the layout.

.....

.....

..... [2]

(ii) Fig. 12.7 shows a printed circuit board (PCB) layout that has been designed using CAD software.
The terminal block used to connect the power leads will need strain relief to avoid the leads pulling out.

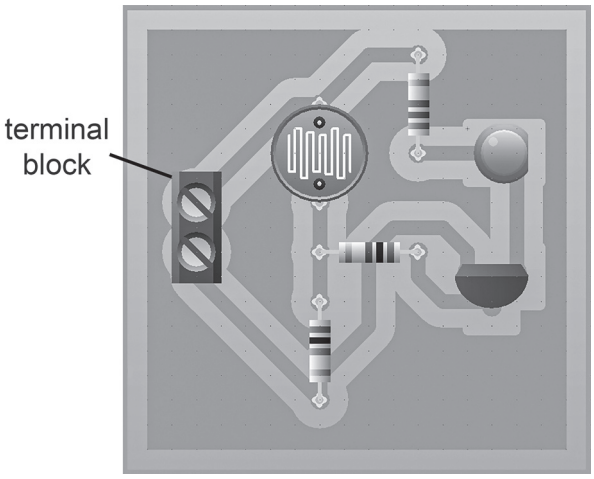

Fig. 12.7

Use sketches and notes to show a method of strain relief for the power leads.

[3]

(e) The list below names five components.

fixed resistor **capacitor** **LED** **potentiometer** **transistor**

State which **two** components could be used to produce an **adjustable** time delay in a circuit.

1 .....

2 .....
[2]

Permission to reproduce items where third-party owned material protected by copyright is included has been sought and cleared where possible. Every reasonable effort has been made by the publisher (UCLES) to trace copyright holders, but if any items requiring clearance have unwittingly been included, the publisher will be pleased to make amends at the earliest possible opportunity.

To avoid the issue of disclosure of answer-related information to candidates, all copyright acknowledgements are reproduced online in the Cambridge Assessment International Education Copyright Acknowledgements Booklet. This is produced for each series of examinations and is freely available to download at www.cambridgeinternational.org after the live examination series.

Cambridge Assessment International Education is part of Cambridge Assessment. Cambridge Assessment is the brand name of the University of Cambridge Local Examinations Syndicate (UCLES), which is a department of the University of Cambridge.

© UCLES 2024